REVISION RECORD			
LTR	ECO NO:	APPROVED:	DATE:

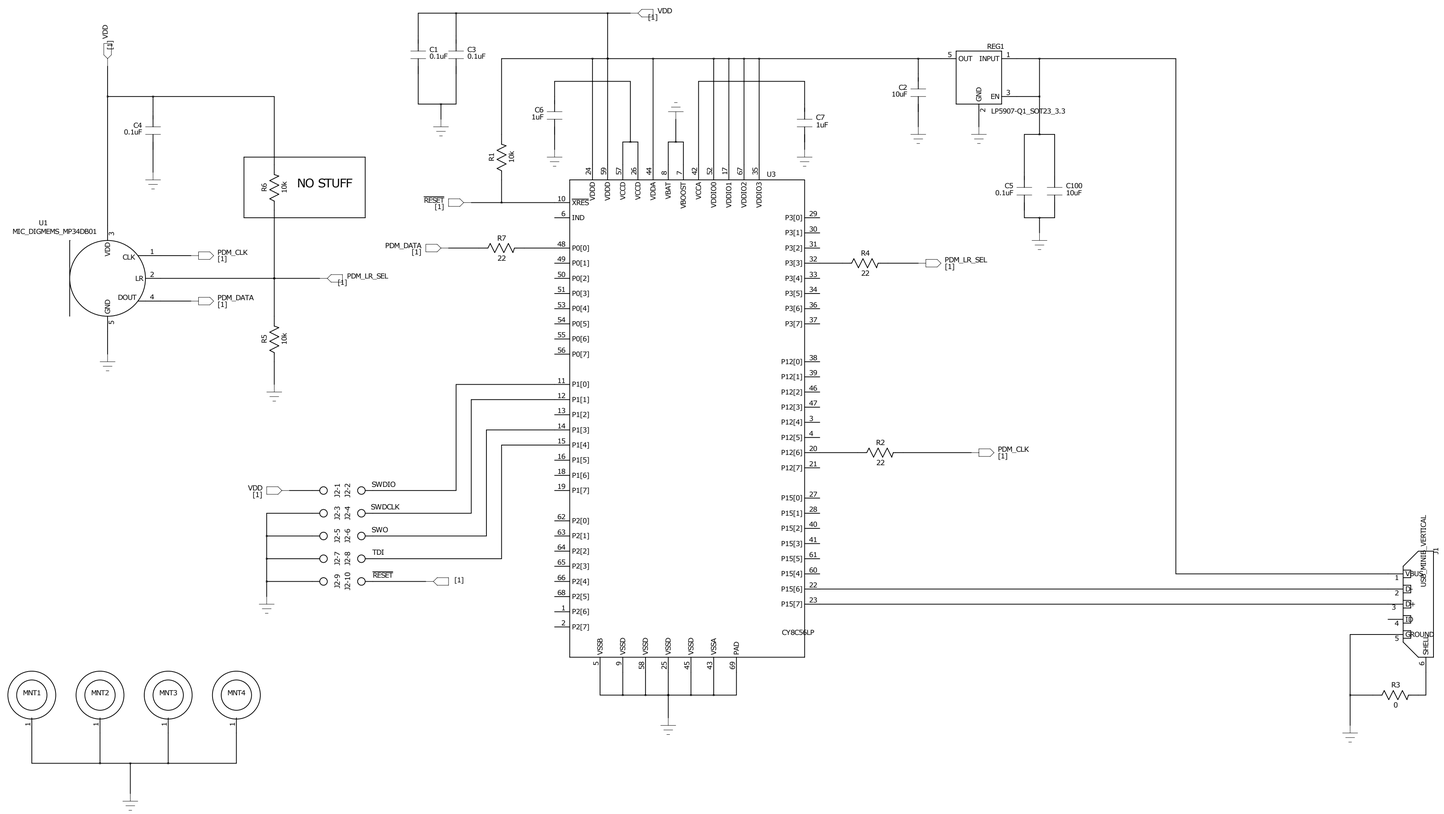

DRAWN: <Drawn By>	DATED: <Drawn Date>	COMPANY: Deckard Audio		
CHECKED: <Checked By>	DATED: <Checked Date>	TITLE: <Title>		
QUALITY CONTROL: <QC By>	DATED: <QC Date>	CODE: <Code>	SIZE: D	DRAWING NO: <Drawing Number> REV: <Revision>
RELEASED: CD	DATED: 7/4/2013	SCALE: <Scale>		SHEET: 1 OF 1