REVISIONS

PAGE	ZONE	REV	ECN	DESCRIPTION	DATE	APPROVED
–	–	**	52671	NEW RELEASE	10/17/97	
–	–	*A	117723	CHANGE TITLE FROM 28LD SOIC CARRIER TAPE (330 MILS) TO CARRIER TAPE, SOIC28 (330MILS)/CHANGE PART NO. FROM S28.33CT TO TAR1128.	07/31/02	
–	–	*B	363596	CHANGE AO VALUE FROM 12.30 TO 10.90, BO VALUE FROM 18.80 TO 18.30 AND POCKET PITCH DISTANCE VALUE FROM 16.0 TO 12.00.ADD STANDARD TOLERANCE.	05/12/05	
–	–	*C	392802	CHANGE DRAWING ACCOMMODATING ALMOST 4 SPROCKET HOLES PER POCKET. N14142.0CT	08/19/05	
–	–	*D	2781878	CHANGED TEMPLATE AND TITLE FROM CARRIER TAPE, SOIC 28 (330 MILS) TO CARRIER TAPE, 28 SOIC 330 MILS TAR1128.	10/08/09	
–	–	*E	4117637	TRANSFER DRAWING TO UPDATED TEMPLATE	09/09/13	

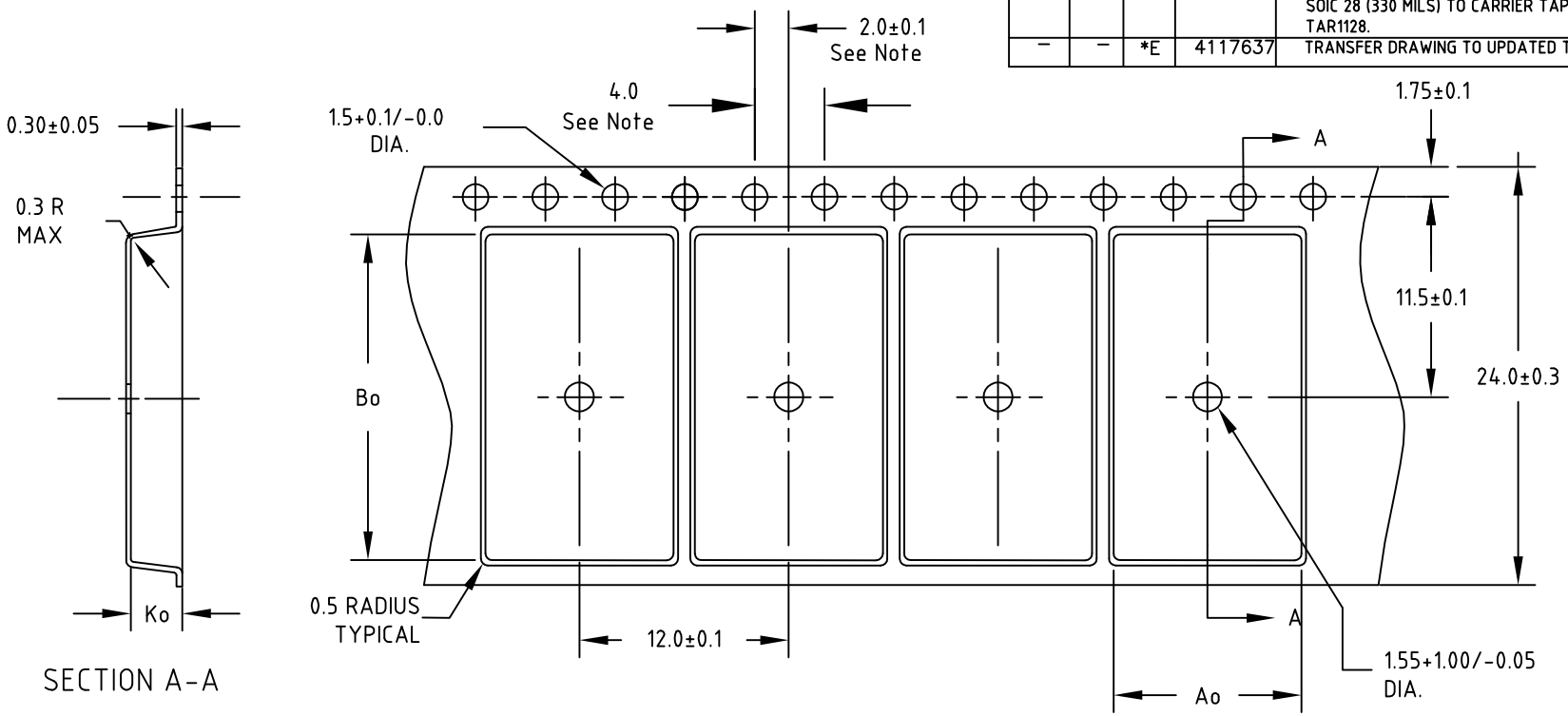

Notes:
1. 10 sprocket hole cumulative tolerance±0.2
2. Camber not to exceed 1mm in 100mm
3 Material: Conductive Black Polystyrene or equivalent
4. Ao and Bo measured on a plane 0.3mm above the bottom of the pocket
5. Komeasured from a plane on the inside bottom of the pocket to the top surface of the carrier.
6. Pocket position relative to sprocket hole measured as true position of pocket, not pocket hole.
7. All material to conform to EIA-541 and EIA-481 standard

Ao=10.90±0.1
Bo=18.30±0.1
Ko= 3.0±0.1

UNLESS OTHERWISE SPECIFIED	DESIGNED BY	DATE	CYPRESS COMPANY CONFIDENTIAL			
ALL DIMENSIONS ARE IN MILLIMETERS STANDARD TOLERANCES ON: DECIMALS .XX ±0.05 .XXX .XXXX ANGLES ± 1°	DRAWN XVC	DATE 09/09/13	TITLE CARRIER TAPE, 28 SOIC 330 MILS TAR1128			
	CHK BY RODP	DATE 09/09/13				
	APPROVED BY QAD	DATE 09/09/13				
MATERIAL SEE NOTE	APPROVED BY AZY	DATE 09/09/13	SIZE A	PART NO. TAR1128	DWG NO 51-51082	REV *E
FINISH N/A			DO NOT SCALE		SHEET 1 OF 1	

THIS DRAWING CONTAINS INFORMATION WHICH IS THE PROPRIETARY PROPERTY OF CYPRESS SEMICONDUCTOR CORPORATION. THIS DRAWING IS RECEIVED IN CONFIDENCE AND ITS CONTENTS MAY NOT BE DISCLOSED WITHOUT WRITTEN CONSENT OF CYPRESS SEMICONDUCTOR CORPORATION.